Simple CGPS Enclosure Design - Examples From Africa Array

683 Sarah Doelger January 21, 2014 Equipment Enclosures 2095

The CGPS station enclosures that were designed for Africa Array (AA) are simple and easy to deploy. Individual parts can be ordered and easily assembled by anyone wishing to build their own.

SUMMARY

All enclosure systems for AA were installed inside buildings and did not require waterproofing. Terminal blocks, circuit breakers, and a load controller are mounted to a back panel and secured to the underside of the enclosure lid. The receiver rests in the bottom of the box. The boxes are fitted with 2" diameter, 45 degree pass-throughs for all solar, battery, and antenna cabling. Batteries are stored adjacent to the enclosures.

ENCLOSURE

Pelican 1500 case (http://www.pelican.com/cases_detail.php?Case=1500)



Profile of system



Plastic two" pass-through for cables routed from the GPS antenna,
Vaisala weather station, solar panel, and battery

BACKPANEL

Material can be of your choice. Plywood is cheapest. Particleboard and Plexiglass are other options.

Items mounted to the board include the following:

-Din Rail - All terminal blocks and breakers are mounted to this.

-35 mm width, 7.5 mm height, McMaster Carr part 8961K15

-Circuit breakers

-Moeller Electric part FAZ-B20/1. Purchase from Newark Electronics, part 32M7845 . Or,
-B and B Electronics part NB1-B25-1P

-Din Rail Terminal Blocks

-Quick-N-Secure DIN rail-mount, 1 circuit, 6mm width McMaster Carr part 9473T34.

-Jumpers for terminal blocks

-McMaster Carr part 9473T37

-Terminal block end stops

-McMaster Carr part 9473T135

-Flexcharge Solar controller

-Flexcharge part NC30L12. Product comes with integrated leads for solar, battery, load, and ground.

-14 gauge color wire

-McMaster Carr part 7587K971

-Ground lug (optional and available at any hardware store)

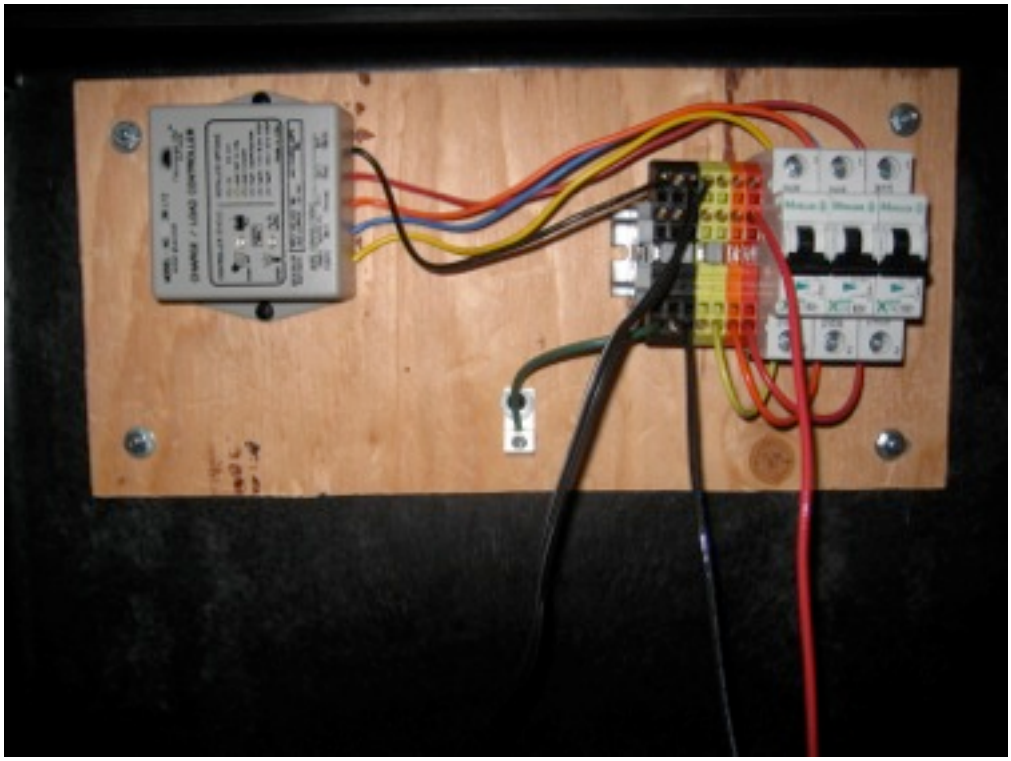

The Africa Array backpanel

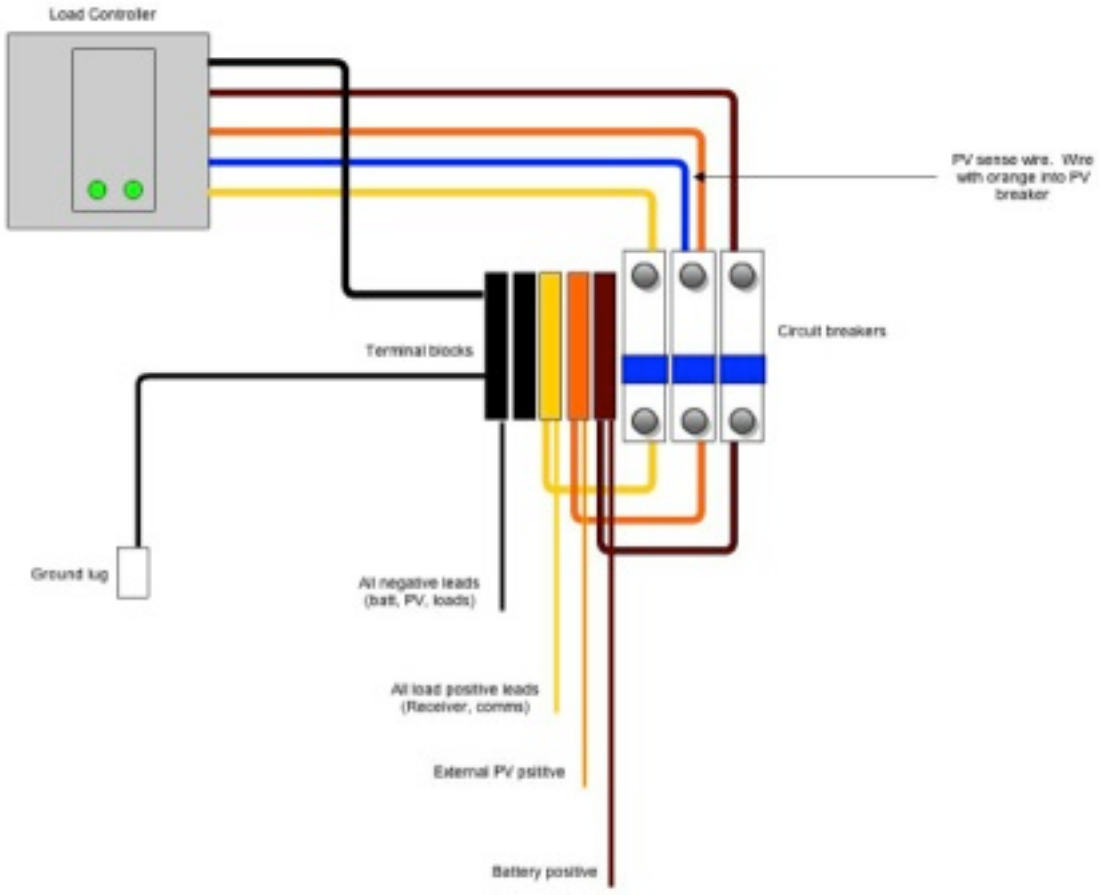

Backpanel wiring diagram

Online URL:
https://kb.unavco.org/article/simple-cgps-enclosure-design-examples-from-africa-array-683.html