UNAVCO Fixed-height Leveling Mount (photograph and diagram)

200 Beth Bartel March 24, 2010 UNAVCO Fixed-height Leveling Mount 1205

UNAVCO Fixed-height Leveling Mount

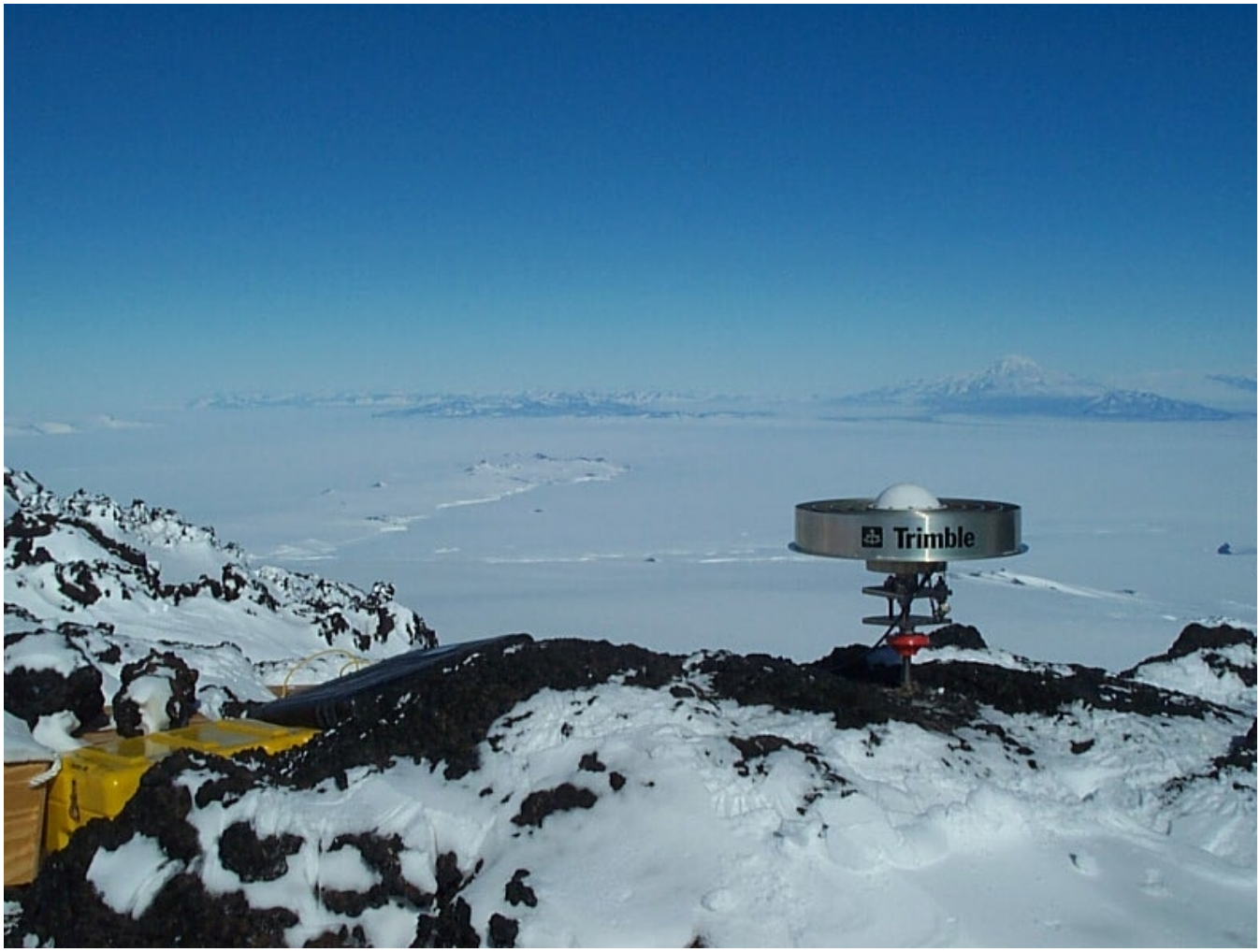

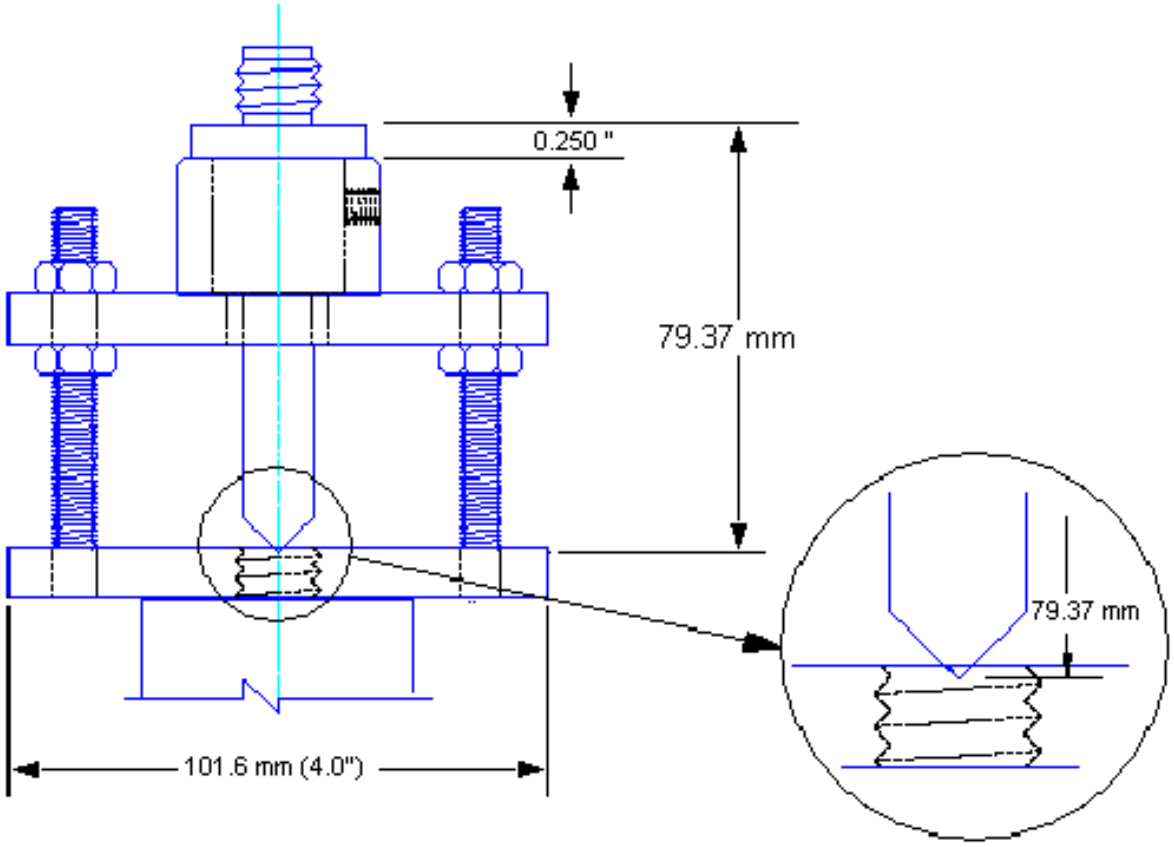

Online URL:
https://kb.unavco.org/article/unavco-fixed-height-leveling-mount-photograph-and-diagram-200.html