REVISIONS				
ZONE	REV	DESCRIPTION	DATE	APRV
	A	RELEASED TO MFG PER ECO 50507	5-7-96	RCG

NOTES:

1. TO BE MANUFACTURED TO ANSI/IPC-A-610A WORKMANSHIP STANDARDS.
2. IDENTIFY WITH PART NUMBER, REVISION, VENDOR ID AND DATE CODE. USE .10 ± .02 HIGH PERMANENT CONTRASTING LETTERING ON ASHTECH APPROVED LABEL OR SHRINK TUBING.
3. COIL CABLE TO A 7" OD, USE TWIST TIE TO SECURE.

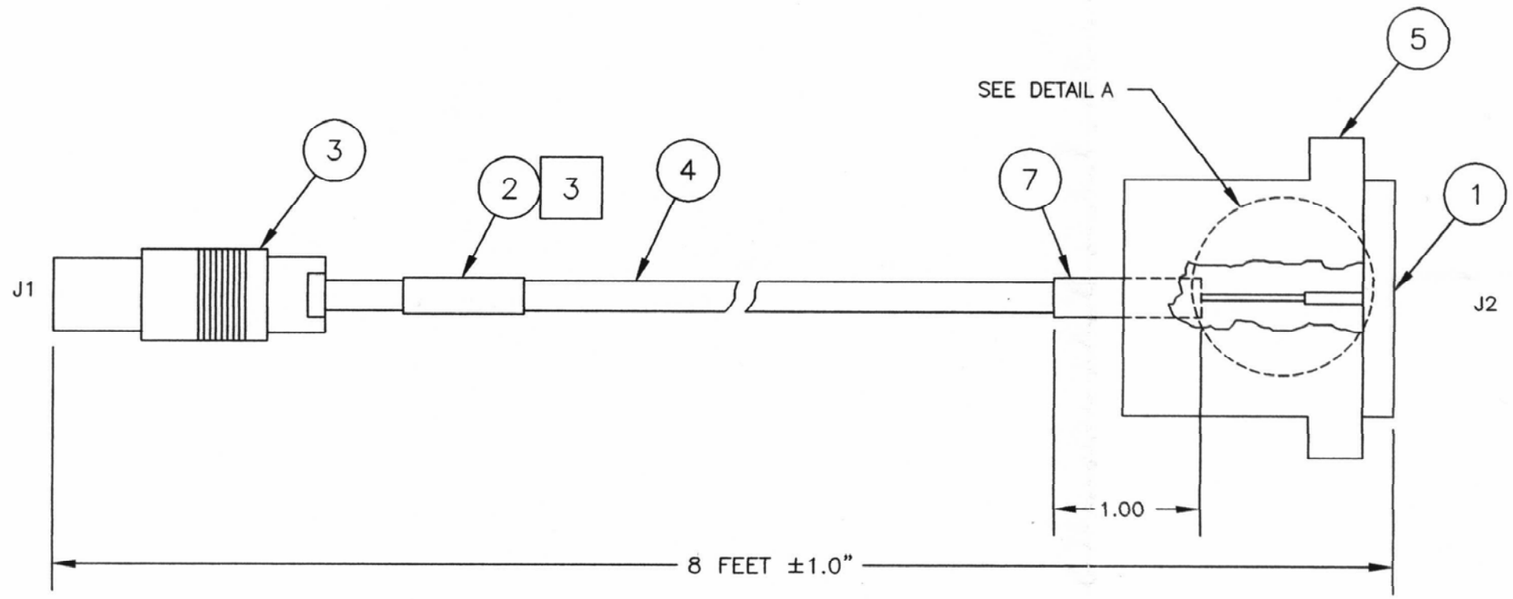

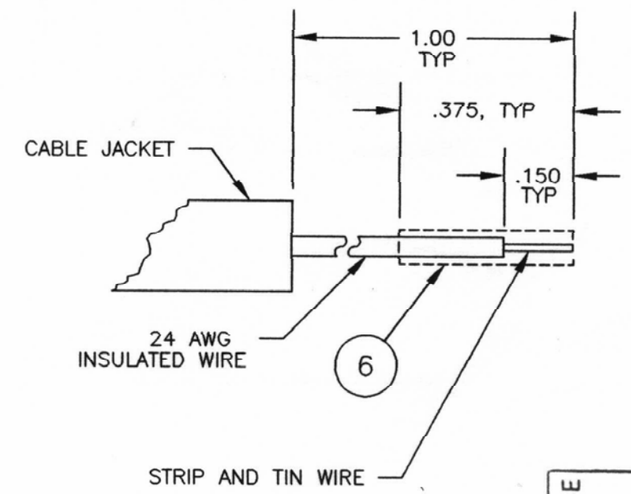

DETAIL A

SCALE : 3X

SCHEMATIC

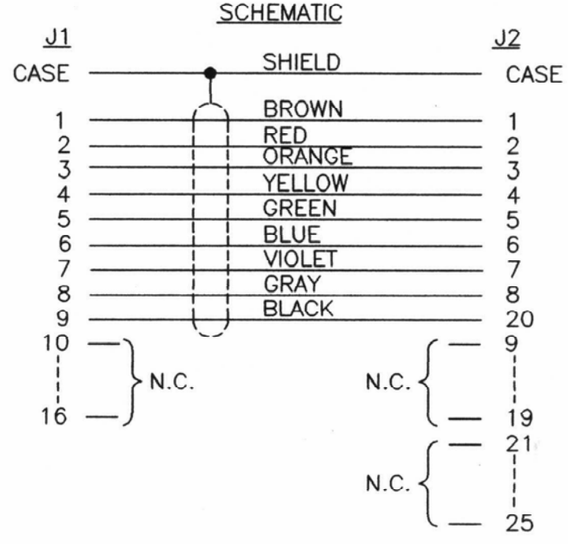

PRODUCTION RELEASE
AUG 2 2 2001
DOCUMENT CONTROL
ASHTECH CONFIDENTIAL

ITEM	PART NUMBER	DESCRIPTION	MANUFACTURER	QTY

PARTS LIST

UNLESS OTHERWISE SPECIFIED:
DIMENSIONS ARE IN INCHES [mm]. DIMENSIONS & TOLERANCES ARE PER ANSI Y14.5M-1982, ABBR ARE PER ANSI Y1.1-1972.

THIS DRAWING AND SPECIFICATIONS HEREIN ARE THE PROPRIETARY PROPERTY OF ASHTECH, INC. AND SHALL NOT BE REPRODUCED, COPIED, OR DISCLOSED, IN WHOLE OR PART, WITHOUT THE EXPRESS WRITTEN PERMISSION OF A DULY AUTHORIZED ASHTECH EMPLOYEE.

TOLERANCES UNLESS OTHERWISE SPECIFIED
DEC ANGLES
.XX [0.X] ± .02 [0.5]
.XXX [0.XX] ± .005 [0.12]
BRACKETED DIMENSIONS ARE IN MILLIMETERS

MATERIAL: N/A

FINISH: N/A

APPROVALS	DATE
DRAWN V. PETERSEN	1-19-94
UPDATED P. McCANN	5-7-96
CHECKED R. Gillenden	5-7-96
APPROVED	

U ■ R □

Ashtech SUNNYVALE, CA 94086

CABLE ASSY, I/O, WP, TRAILBLAZER

SIZE	DRAWING NO.	REV
B	A700744	A

SCALE: NONE | DO NOT SCALE DRAWING | SHEET 1 OF 1

THIRD ANGLE PROJECTION